LONG RANGE AUTOMOTIVE

PART NO	LDEF110-LH

TO SUIT LANDROVER DEFENDER 110

LONG RANGE AUXILIARY TANK

60L

1993 - 2016

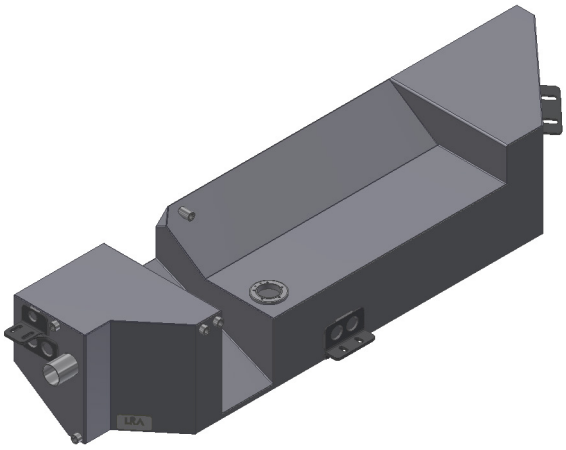

135L	1000km	2mm
TOTAL FUEL CAPACITY	DRIVING RANGE *based on 11.1L/100km*	ALUMINISED STEEL

Whether its towing touring or just everyday driving, a Landrover Defender owner with an LRA tank fitted can fill up when it's cheap and drive on by laughing when the fuel goes through the up cycle every week!

The kit includes everything required to fit the new tank with minimal fuss. The tank is constructed from 2mm aluminised steel, etch primed and finished in a hammertone silver enamel paint.

- The combined fuel capacity is 135L (standard tank capacity is 75L + 60L auxiliary)
- Driving range is in excess of 1000kms (based off 11.1L per 100km)
- The LDEF110-LH is located on the LH sill of the vehicle.
- The LDEF110-LH will **not** fit with the factory side steps.

FEATURES

- 3 year Australia wide warranty on the tank
- 1 Year Australia Wide Warranty on Parts
- Full Internal Baffling
- Excellent Ground Clearance
- 2mm T125CQ Aluminised Steel Construction
- Original Vehicle Emission Control System Retained

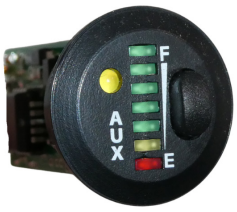

All auxiliary tanks come with a quality LED switch gauge unit which shows the fuel level on the auxiliary tank and incorporates the switch to work the transfer pump.

SUPPLIED $_____ FITTED $_____

For more information visit our website or give us a call

23 Industry Court, Lilydale, Victoria, 3140.

info@longerangeautomotive.com.au

P. +61 3 9739 5667

www.longerangeautomotive.com.au